1 LEVEL 1 - FINISH FLOOR PLAN - NORTH - AREA A
SCALE: 1/8" = 1'-0"

NORTH

GRAPHIC LEGEND

Room Name	ROOM NAME
101	ROOM NUMBER
Wall	WALL FINISH
Base	BASE FINISH
Floor	FLOOR FINISH

CONC-1	POLISHED CONCRETE
CONC-2	POLISHED CONCRETE - STAINED
CPT-1	CARPET TILE (18" x 36" BENTLEY MILLS AFTER DARK OR APPROVED EQUAL)
CPT-2	CARPET TILE (18" x 36" BENTLEY MILLS BUZZ WORTHY OR APPROVED EQUAL)
CPT-3	CARPET TILE (18" x 36" BENTLEY MILLS NIGHT VISION OR APPROVED EQUAL)
CPT-04	CARPET TILE (18" x 36" BENTLEY MILLS BURNISH OR APPROVED EQUAL)
CPT-05	CARPET TILE (18" x 36" BENTLEY MILLS MISFIT OR APPROVED EQUAL)
CPT-06	CARPET TILE (18" x 36" BENTLEY MILLS TYPECAST OR APPROVED EQUAL)
CPT-07	WALKOFF CARPET TILE (MOHAWK FIRST STEP II OR APPROVED EQUAL)
ESD-1	STATIC CONTROL FLOORING (SHAW SUMMIT SERIES GREYLOCK OR APPROVED EQUAL)
FTL-1	FLOOR TILE (BEDROSIAN METRO 2.0 24" x 24" FLOOR TILE NIGHTSKY OR APPROVED EQUAL)

GENERAL SHEET NOTES

A. REFER TO THE A0.X SERIES SHEETS FOR ARCHITECTURAL GENERAL NOTES, DRAWING, REFERENCE AND MATERIAL SYMBOLS, ABBREVIATIONS, AS WELL AS DIMENSIONING CONVENTIONS USED ON THIS SHEET.

B. REFER TO THE A8.X SERIES SHEETS FOR ADDITIONAL INFORMATION NOT SHOWN ON THIS SHEET.

C. ALL WALLS TO BE PAINTED P-1 UNLESS NOTED OTHERWISE.

D. REFER TO A9.1.1 FOR STANDARD INTERIOR FINISH DETAILS.

E. ALL CHANGES IN LEVEL OF FLOOR SURFACES SHALL COMPLY WITH 2010 REQUIREMENTS CONTAINED IN ADA 302.

F. SOLE PRODUCT OR MANUFACTURER/SOURCE: WHERE A SINGLE PRODUCT OR MANUFACTURER/SOURCE IS NAMED, SUBJECT TO COMPLIANCE WITH REQUIREMENTS, COMPARABLE PRODUCTS WILL BE CONSIDERED.

G. ALL ROLLER SHADE TYPE TO BE "RSH-2" U.N.O. (TYP.)

SHEET KEYNOTES

AF101 EXISTING WALLS AND/OR FIXTURES TO BE REMOVED IN THIS AREA. PATCH AND REPAIR CONCRETE AS NEEDED AFTER DEMOLITION.

UCCS

UCCS CYBERSECURITY AND SPACE ECOSYSTEM EXPANSION

3650 NORTH NEVADA AVE
COLORADO SPRINGS, CO, 80907

SMITHGROUP

899 LOGAN STREET
SUITE 508
DENVER, CO 80203
303.832.3272
smithgroup.com

RIDER LEVETT BUCKNALL
COST ESTIMATOR
1675 LARIMER STREET
DENVER, CO, 80202
720-904-1480

NV5
ACOUSTICS, IT/TELECOM & SECURITY, AUDIOVISUAL
2650 18TH STREET, SUITES 201-203
DENVER, CO 80211
720-213-7500

MARTIN/MARTIN, INC.
STRUCTURAL ENGINEER
12499 WEST COLFAX AVENUE
LAKEWOOD, CO, 80215
303-431-6100

ISSUED FOR	REV	DATE
BID SET		04MAY2021
CONSTRUCTION DOCUMENTS		15APR2021
DESIGN DEVELOPMENT		23DEC2020
SCHEMATIC DESIGN		19OCT2020

SEALS AND SIGNATURES

COLORADO LICENSED
MELANIA LA COBB
404736
ARCHITECT
05/04/2021

KEYPLAN

NORTH

NORTH AREA A

SHEET TITLE

LEVEL 1 - FINISH FLOOR PLAN - NORTH - AREA A

12654.000

PROJECT NUMBER

CD

SHEET NUMBER

AF2.1

Author

Plot Date: 5/4/2021 10:18:57 AM

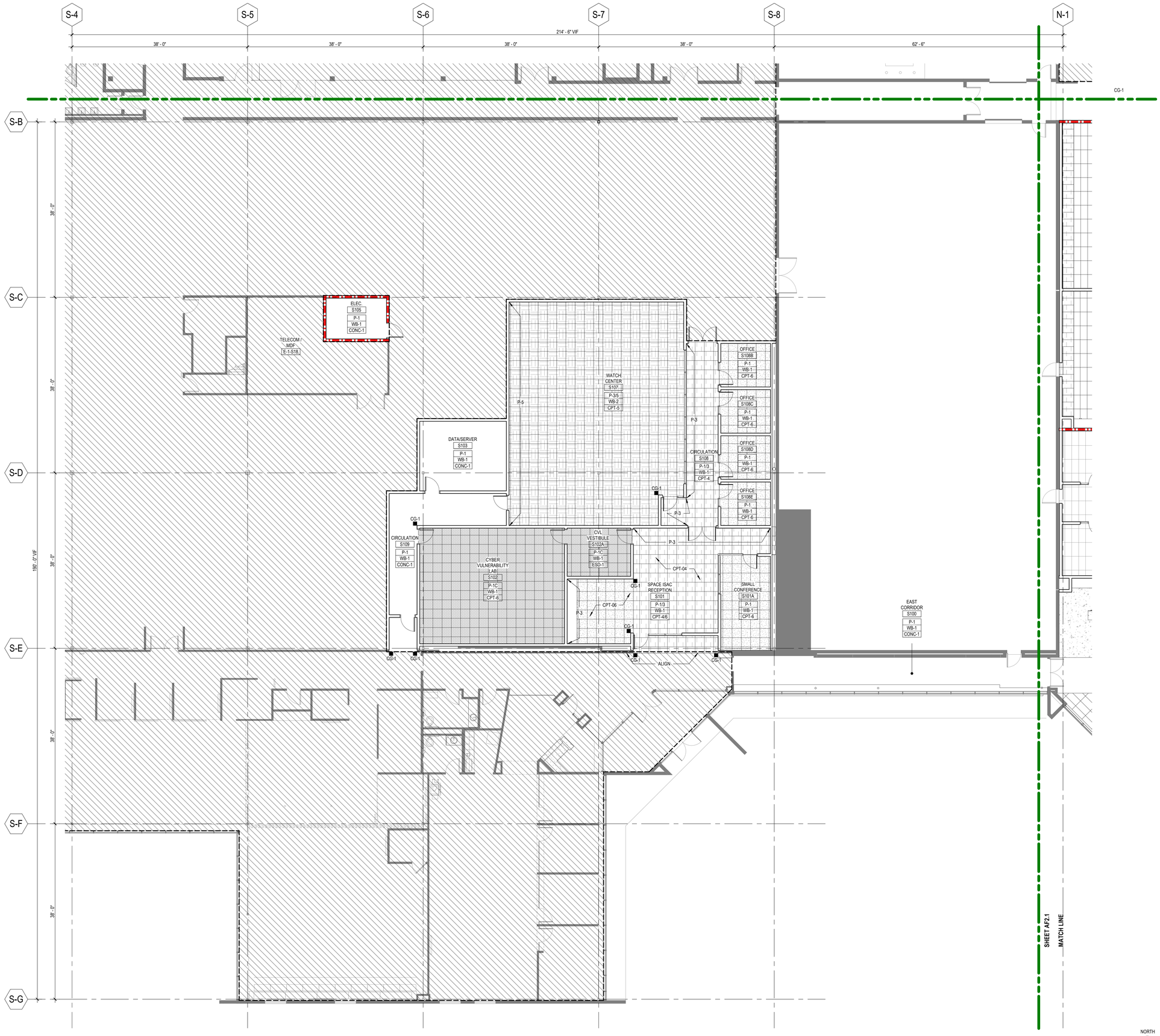

1 LEVEL 1 - FINISH FLOOR PLAN - SOUTH - AREA A
SCALE: 1/8" = 1'-0"

NORTH

GRAPHIC LEGEND

Room Name	ROOM NAME
101	ROOM NUMBER
Wall	WALL FINISH
Base	BASE FINISH
Floor	FLOOR FINISH

CONC-1	POLISHED CONCRETE
CONC-2	POLISHED CONCRETE - STAINED
CPT-1	CARPET TILE (18" x 36" BENTLEY MILLS AFTER DARK OR APPROVED EQUAL)
CPT-2	CARPET TILE (18" x 36" BENTLEY MILLS BUZZ WORTHY OR APPROVED EQUAL)
CPT-3	CARPET TILE (18" x 36" BENTLEY MILLS NIGHT VISION OR APPROVED EQUAL)
CPT-04	CARPET TILE (18" x 36" BENTLEY MILLS BURNISH OR APPROVED EQUAL)
CPT-05	CARPET TILE (18" x 36" BENTLEY MILLS MISFIT OR APPROVED EQUAL)
CPT-06	CARPET TILE (18" x 36" BENTLEY MILLS TYPECAST OR APPROVED EQUAL)
CPT-07	WALKOFF CARPET TILE (MOHAWK FIRST STEP II OR APPROVED EQUAL)
ESD-1	STATIC CONTROL FLOORING (SHAW SUMMIT SERIES GREYLOCK OR APPROVED EQUAL)
FTL-1	FLOOR TILE (BEDROSIAN METRO 2.0 24" x 24" FLOOR TILE NIGHTSKY OR APPROVED EQUAL)

GENERAL SHEET NOTES

A. REFER TO THE A0.X SERIES SHEETS FOR ARCHITECTURAL GENERAL NOTES, DRAWING, REFERENCE AND MATERIAL SYMBOLS, ABBREVIATIONS, AS WELL AS DIMENSIONING CONVENTIONS USED ON THIS SHEET.

B. REFER TO THE A8.X SERIES SHEETS FOR ADDITIONAL INFORMATION NOT SHOWN ON THIS SHEET.

C. ALL WALLS TO BE PAINTED P-1 UNLESS NOTED OTHERWISE.

D. REFER TO A9.1.1 FOR STANDARD INTERIOR FINISH DETAILS.

E. ALL CHANGES IN LEVEL OF FLOOR SURFACES SHALL COMPLY WITH 2010 REQUIREMENTS CONTAINED IN ADA 302.

F. SOLE PRODUCT OR MANUFACTURER/SOURCE: WHERE A SINGLE PRODUCT OR MANUFACTURER/SOURCE IS NAMED, SUBJECT TO COMPLIANCE WITH REQUIREMENTS, COMPARABLE PRODUCTS WILL BE CONSIDERED.

G. ALL ROLLER SHADE TYPE TO BE "RSH-2" U.N.O. (TYP.)

UCCS

UCCS CYBERSECURITY AND SPACE ECOSYSTEM EXPANSION

3650 NORTH NEVADA AVE
COLORADO SPRINGS, CO, 80907

SMITHGROUP

899 LOGAN STREET
SUITE 508
DENVER, CO 80203
303.832.3272
smithgroup.com

RIDER LEVETT BUCKNALL
COST ESTIMATOR
1675 LARIMER STREET
DENVER, CO, 80202
720-904-1480

NV5
ACOUSTICS, IT/TELECOM & SECURITY, AUDIOVISUAL
2650 18TH STREET, SUITES 201-203
DENVER, CO 80211
720-213-7550

MARTIN/MARTIN, INC.
STRUCTURAL ENGINEER
12499 WEST COLFAX AVENUE
LAKEWOOD, CO, 80215
303-431-6100

ISSUED FOR	REV	DATE
BID SET		04MAY2021
CONSTRUCTION DOCUMENTS		15APR2021
DESIGN DEVELOPMENT		23DEC2020
SCHEMATIC DESIGN		19OCT2020

SEALS AND SIGNATURES

KEYPLAN

NORTH

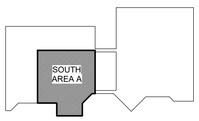

SHEET TITLE

LEVEL 1 - FINISH FLOOR PLAN - SOUTH - AREA A

12654.000

PROJECT NUMBER

CD

AF2.3

SHEET NUMBER

Plot Date: 5/4/2021 10:19:05 AM Author

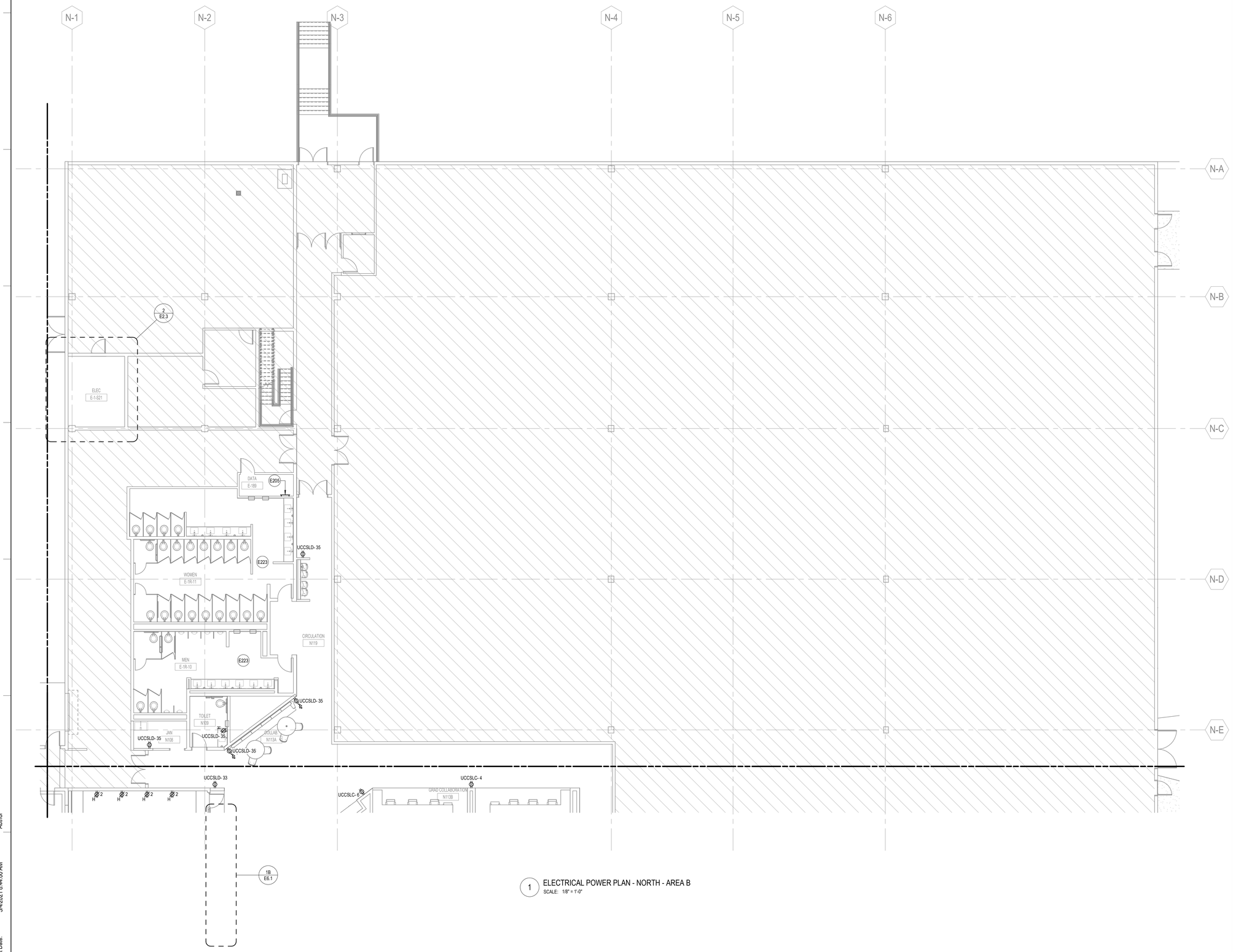

1 ELECTRICAL POWER PLAN - NORTH - AREA B
SCALE: 1/8" = 1'-0"

GENERAL SHEET NOTES

A. SEE DRAWING E0.01 FOR ABBREVIATIONS, SYMBOLS, GENERALNOTES AND DEVICE MOUNTING HEIGHT OF WALL MOUNTED DEVICES, UON.

B. SOLE PRODUCT OR MANUFACTURER/SOURCE: WHERE A SINGLE PRODUCT OR MANUFACTURER/SOURCE IS NAMED, SUBJECT TO COMPLIANCE WITH REQUIREMENTS, COMPARABLE PRODUCTS WILL BE CONSIDERED.

C. SEE T AND Y SERIES PLANS FOR ADDITIONAL INFORMATION AND REQUIREMENTS.

D. COORDINATE ALL DEVICE LOCATIONS AND MOUNTING HEIGHTS WITH ARCHITECTURAL DRAWINGS PRIOR TO ROUGH-IN.

E. THE CONTRACTOR SHALL COORDINATE EXACT LOCATION OF EQUIPMENT POWER CONNECTIONS WITH EQUIPMENT INSTALLER PRIOR TO ROUGH-IN.

F. CONTRACTOR SHALL BE RESPONSIBLE FOR SUPPLYING ANY REQUIRED TRANSFORMER/POWER SUPPLIES FOR DOOR HARDWARE. COORDINATE WITH ARCHITECTURAL AND SECURITY DRAWINGS FOR DOOR HARDWARE. PROVIDE 120V POWER AS REQUIRED.

G. PROVIDE WIRING METHODS COMPLIANT WITH UL 2196 STANDARD FOR FIRE RESISTIVE CABLING.

H. VOLTAGE DROP SHALL BE LIMITED TO LESS THAN 3% FOR ALL BRANCH CIRCUITS AND 2% FOR ALL FEEDERS.

I. X-RAY EXISTING FLOORS TO COORDINATE ALL WIRING DEVICE AND CORE DRILL LOCATIONS WITH ARCHITECTURAL DRAWINGS PRIOR TO ROUGH IN. LOCATION TO BE DETERMINED IN CONJUNCTION WITH FURNITURE SELECTION.

J. CONTRACTOR SHALL COORDINATE AND FIELD VERIFY REQUIREMENT OF NEUTRAL CONDUCTOR FOR ALL EQUIPMENT AND PROVIDE NEUTRAL CONDUCTOR AS NECESSARY.

K. FOR WORKSTATION CIRCUITS SHARING A NEUTRAL, PROVIDE MULTI POLE CIRCUIT BREAKER. TIE DEVICES ARE NOT ACCEPTABLE.

L. TRIPPING OF GFCI RECEPTACLES SHALL NOT AFFECT THE DOWNSTREAM RECEPTACLES.

M. NO MORE THAN 3 CIRCUITS MAY SHARE A HOMERUN. CIRCUITS SHALL BE CONFIGURED WITH DEDICATED NEUTRAL CONDUCTORS.

N. CIRCUITS FEEDING AV EQUIPMENT SHALL SHARE SAME PHASE.

O. ALL UNUSED WALL OUTLETS TO BE COVERED WITH BLANK PLATE. ALL BLANK PLATE COLORS TO MATCH WALL COLOR.

P. SEE ANY COMMUNICATIONS PATHWAY PLAN AND AV DRAWINGS, FOR ADDITIONAL CONDUIT TO BE PROVIDED BY ELECTRICAL CONTRACTOR.

Q. ALL CONDUIT ROUTED WITHIN SLAB SHALL COMPLY WITH GUIDELINES LISTED IN STRUCTURAL DRAWINGS.

R. ELECTRICAL ROOMS IN ACCORDANCE WITH NEC 110.26.

S. OPEN CEILING AREAS ARE CONSIDERED PART OF THE ARCHITECTURAL DESIGN ELEMENT. COORDINATE ROUTING AND MOUNTING OF ANY CONDUIT, CABLING OR DEVICES WITH ARCHITECT PRIOR TO INSTALLATION.

SHEET KEYNOTES

E205 PROVIDE 4"X24" COPPER GROUND BAR, STORM POWER COMPONENTS #SCGB-12KT / COVER-375-24, OR EQUAL. INSTALL PROVIDED MOUNTED BRACKETS, ISOLATORS AND COVER PER MANUFACTURER SPECIFICATIONS. MOUNT @ 96" AFF TO MIDDLE OF GROUND BAR. PROVIDE INSULATED #4 COPPER GROUND CONDUCTOR AND BOND TO GROUNDING ELECTRODE SYSTEM.

E223 REPLACE EXISTING RECEPTACLE(S) IN THIS AREA/ROOM WITH NEW IN EXISTING LOCATION(S). REUSE EXISTING CIRCUITING.

UCCS

UCCS CYBERSECURITY AND SPACE ECOSYSTEM EXPANSION

3650 North Nevada Ave
Colorado Springs, CO, 80907

SMITHGROUP

899 LOGAN STREET
SUITE 508
DENVER, CO 80203
303.832.3272
smithgroup.com

RIDER LEVETT BUCKNALL
COST ESTIMATOR
1675 LARIMER STREET
DENVER, CO, 80202
720-904-1480

NV5
ACOUSTICS, IT/TELECOM & SECURITY, AUDIOVISUAL
2650 18TH STREET, SUITES 201-203
DENVER, CO 80211
720-213-7550

MARTIN/MARTIN, INC.
STRUCTURAL ENGINEER
12499 WEST COLFAX AVENUE
LAKEWOOD, CO, 80215
303-431-6100

ISSUED FOR	REV	DATE
BID SET		04MAY2021
CONSTRUCTION DOCUMENTS		15APR2021
DESIGN DEVELOPMENT		23DEC2020
SCHEMATIC DESIGN		19OCT2020

SEALS AND SIGNATURES

Exp 10-31-21

KEYPLAN

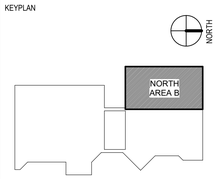

SHEET TITLE

ELECTRICAL POWER PLAN - NORTH - AREA B

PROJECT NUMBER 12654.000

CD

SHEET NUMBER **E2.1.3**

Author

5/4/2021 8:44:00 AM

Plot Date:

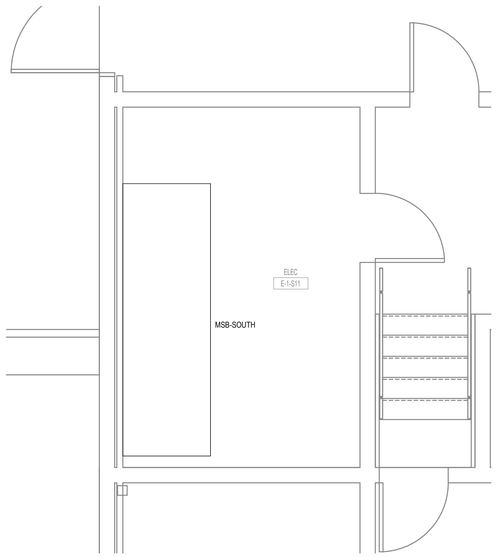

1 MAIN ELECTRICAL ROOM E-1-S11
SCALE: 3/8" = 1'-0"

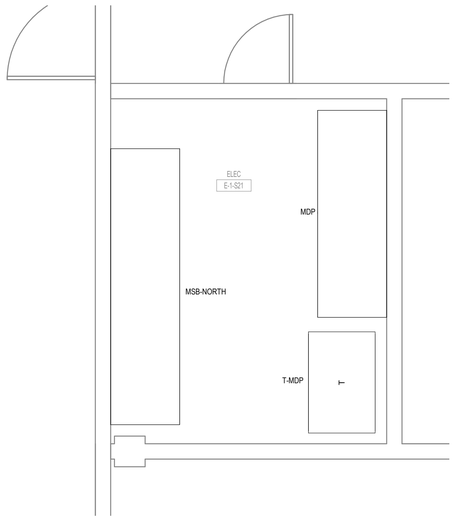

2 MAIN ELECTRICAL ROOM E-1-S21
SCALE: 3/8" = 1'-0"

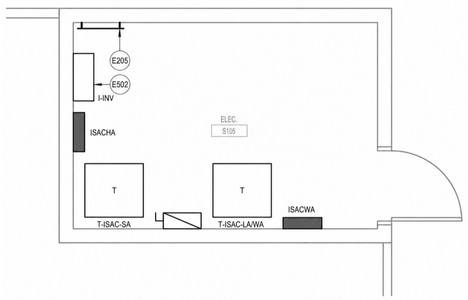

3 ISAC ELECTRICAL ROOM S105
SCALE: 3/8" = 1'-0"

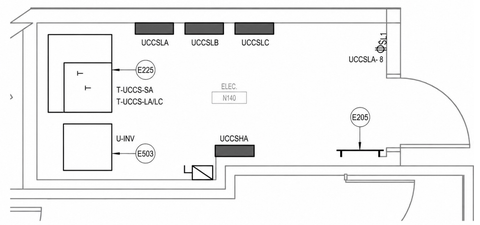

4 UCCS ELECTRICAL ROOM N140
SCALE: 3/8" = 1'-0"

GENERAL SHEET NOTES

A. SEE DRAWING E0.01 FOR ABBREVIATIONS, SYMBOLS, GENERALNOTES AND DEVICE MOUNTING HEIGHT OF WALL MOUNTED DEVICES, UON.

B. SOLE PRODUCT OR MANUFACTURER/SOURCE: WHERE A SINGLE PRODUCT OR MANUFACTURER/SOURCE IS NAMED, SUBJECT TO COMPLIANCE WITH REQUIREMENTS, COMPARABLE PRODUCTS WILL BE CONSIDERED.

C. SEE T AND Y SERIES PLANS FOR ADDITIONAL INFORMATION AND REQUIREMENTS.

D. COORDINATE ALL DEVICE LOCATIONS AND MOUNTING HEIGHTS WITH ARCHITECTURAL DRAWINGS PRIOR TO ROUGH-IN.

E. THE CONTRACTOR SHALL COORDINATE EXACT LOCATION OF EQUIPMENT POWER CONNECTIONS WITH EQUIPMENT INSTALLER PRIOR TO ROUGH-IN.

F. CONTRACTOR SHALL BE RESPONSIBLE FOR SUPPLYING ANY REQUIRED TRANSFORMER/POWER SUPPLIES FOR DOOR HARDWARE. COORDINATE WITH ARCHITECTURAL AND SECURITY DRAWINGS FOR DOOR HARDWARE. PROVIDE 120V POWER AS REQUIRED.

G. PROVIDE WIRING METHODS COMPLIANT WITH UL 2196 STANDARD FOR FIRE RESISTIVE CABLING.

H. VOLTAGE DROP SHALL BE LIMITED TO LESS THAN 3% FOR ALL BRANCH CIRCUITS AND 2% FOR ALL FEEDERS.

I. X-RAY EXISTING FLOORS TO COORDINATE ALL WIRING DEVICE AND CORE DRILL LOCATIONS WITH ARCHITECTURAL DRAWINGS PRIOR TO ROUGH IN. LOCATION TO BE DETERMINED IN CONJUNCTION WITH FURNITURE SELECTION.

J. CONTRACTOR SHALL COORDINATE AND FIELD VERIFY REQUIREMENT OF NEUTRAL CONDUCTOR FOR ALL EQUIPMENT AND PROVIDE NEUTRAL CONDUCTOR AS NECESSARY.

K. FOR WORKSTATION CIRCUITS SHARING A NEUTRAL, PROVIDE MULTI POLE CIRCUIT BREAKER. TIE DEVICES ARE NOT ACCEPTABLE.

L. TRIPPING OF GFCI RECEPTACLES SHALL NOT AFFECT THE DOWNSTREAM RECEPTACLES.

M. NO MORE THAN 3 CIRCUITS MAY SHARE A HOMERUN. CIRCUITS SHALL BE CONFIGURED WITH DEDICATED NEUTRAL CONDUCTORS.

N. CIRCUITS FEEDING AV EQUIPMENT SHALL SHARE SAME PHASE.

O. ALL UNUSED WALL OUTLETS TO BE COVERED WITH BLANK PLATE. ALL BLANK PLATE COLORS TO MATCH WALL COLOR.

P. SEE ANY COMMUNICATIONS PATHWAY PLAN AND AV DRAWINGS, FOR ADDITIONAL CONDUIT TO BE PROVIDED BY ELECTRICAL CONTRACTOR.

Q. ALL CONDUIT ROUTED WITHIN SLAB SHALL COMPLY WITH GUIDELINES LISTED IN STRUCTURAL DRAWINGS.

R. ELECTRICAL ROOMS IN ACCORDANCE WITH NEC 110.26.

S. OPEN CEILING AREAS ARE CONSIDERED PART OF THE ARCHITECTURAL DESIGN ELEMENT. COORDINATE ROUTING AND MOUNTING OF ANY CONDUIT, CABLING OR DEVICES WITH ARCHITECT PRIOR TO INSTALLATION.

SHEET KEYNOTES

E205 PROVIDE 4"X24" COPPER GROUND BAR, STORM POWER COMPONENTS #SCGB-12KT / COVER-375-24, OR EQUAL. INSTALL PROVIDED MOUNTED BRACKETS, ISOLATORS AND COVER PER MANUFACTURER SPECIFICATIONS. MOUNT @ 96" AFF TO MIDDLE OF GROUND BAR. PROVIDE INSULATED #4 COPPER GROUND CONDUCTOR AND BOND TO GROUNDING ELECTRODE SYSTEM.

E225 PROVIDE STRUCTURAL MOUNTING FRAME SUITABLE FOR STACK MOUNTING TRANSFORMER ABOVE FLOOR MOUNTED TRANSFORMER. INCLUDE SHOP DRAWINGS STAMPED BY STRUCTURAL ENGINEER IN TRANSFORMER SUBMITTAL.

E502 PROVIDE 1.0KVA EMERGENCY LIGHTING INVERTER, MYERS ILLUMINATOR EM #6-EM-2-S-B-D-20-02-TW, 65KAIC, OR EQUAL. INSTALL PER EQUIPMENT MANUFACTURER SPECIFICATIONS. INCLUDE STARTUP, TRAINING AND EXTENDED WARRANTY.

E503 PROVIDE 3.75KVA EMERGENCY LIGHTING INVERTER, MYERS ILLUMINATOR SUPERNOVA #5-I-03-S-B-A-20-03-T, 65KAIC, OR EQUAL. INSTALL PER EQUIPMENT MANUFACTURER SPECIFICATIONS. INCLUDE STARTUP, TRAINING AND EXTENDED WARRANTY.

UCCS

UCCS CYBERSECURITY AND SPACE ECOSYSTEM EXPANSION

3650 North Nevada Ave
Colorado Springs, CO, 80907

SMITHGROUP

899 LOGAN STREET
SUITE 508
DENVER, CO 80203
303.832.3272
smithgroup.com

RIDER LEVETT BUCKNALL
COST ESTIMATOR
1675 LARIMER STREET
DENVER, CO, 80202
720-904-1480

NV5
ACOUSTICS, IT/TELECOM & SECURITY, AUDIOVISUAL
2650 18TH STREET, SUITES 201-203
DENVER, CO 80211
720-213-7550

MARTIN/MARTIN, INC.
STRUCTURAL ENGINEER
12499 WEST COLFAX AVENUE
LAKEWOOD, CO, 80215
303-431-6100

ISSUED FOR	REV	DATE
BID SET		04MAY2021
CONSTRUCTION DOCUMENTS		15APR2021
DESIGN DEVELOPMENT		23DEC2020
SCHEMATIC DESIGN		19OCT2020

SEALS AND SIGNATURES

COLORADO LICENSED
BRYAN P. WEHLING
46278
5-4-21
PROFESSIONAL ENGINEER

Exp 10-31-21

SHEET TITLE
ELECTRICAL - ENLARGED ROOMS

12654.000
PROJECT NUMBER

CD
SHEET NUMBER

E2.3

Author

Plot Date: 5/4/2021 8:44:05 AM

Short-Circuit Calculations

The following calculations are based on the "Point-by Point" method where:

Isc = Isc x M M= 1/(1+f) f = 1.732 x L x I / C x E XFMR: IP(sca)= IP(sca)x Vp x%Z / 100,000xKVA IS(sca... Vp x M x IS(sca) / Vs

SOURCE FAULT VALUE DERIVED FROM PREVIOUSLY ENGINEERED PLANS

Fault Point	Fault Point Description	Source (Fault Point)	Source I (amps)	Conduit Type	Wire/Bus Size	Wire/Bus Type	'C' value	E (volts)	L (length)	X'FMR KVA	X'FMR Z	f	M	Isc
1	EXISTING MSB-SOUTH		25044											25044
2	ISACHA	1	25044	M	1 Set(s) of 500 KCML	AL	18755	480	197			0.949	0.51	12848
3	T-ISAC-LA/WA PRI	2	12848	M	1 Set(s) of 2/0	AL	7186	480	12			0.077	0.93	11925
4	T-ISAC-LA/WA SEC	3	11925	M	Set(s) of		#N/A	208		75	5.2	6.866	0.13	3499
5	T-ISAC-SA PRI	2	12848	M	1 Set(s) of 2/0	AL	7186	480	8			0.052	0.95	12218
6	T-ISAC-SA SEC	5	12218	M	Set(s) of		#N/A	208		75	5.2	7.034	0.12	3509

1) ELCTRICAL EQUIPMENT AIC RATING SHALL EXCEED CACULATED FAULT VALUE
2) ELECTRICAL EQUIPMENT FED FROM A TRANSFORMER SECONDARY RESULTING IN LESS THAN 10000 Isc SHALL BE RATED 10kAIC

Ex Switchboard: MSB-SOUTH

Location: ELEC E-1-S11 **Volts:** 480Y/277 **A.I.C. Rating:** 65,000
Supply From: **Phases:** 3 **Mains Type:** MCB
Mounting: **Wires:** 4 **Mains Rating:** 4000 A
Enclosure: **MCB Rating:** 4000 A

CKT	Circuit Description	# of Poles	Frame Size	Trip Rating	Load	Remarks
1	EXISTING LOAD PER PREVIOUSLY ENGINEERED PLANS	3	0 A	0 A	1708536 VA	
2	ISACHA	3	400 A	300 A	151320 VA	
3						
4						
5						
6						
7						
8						
9						
10						
11						
12						
13						
14						
				Total Conn. Load:	1859856 VA	
				Total Amps:	2237 A	

Load Classification	Connected Load	Demand Factor	Estimated Demand	Panel Totals	
Lighting	2997 VA	125.00%	3746 VA		
Power	1788332 VA	100.00%	1788332 VA	Total Conn. Load:	1859856 VA
Receptacle	18000 VA	77.78%	14000 VA	Total Est. Demand:	1862536 VA
Mechanical Equipment	50527 VA	111.74%	56458 VA	Total Conn.:	2237 A
				Total Est. Demand:	2240 A

Notes:
SWITCHBOARD SCHEDULE IS NOT INDICITIVE OF EXISTING ELECTRICAL EQUIPMENT DEVICE CONFIGURATION AND IS SHOWN FOR LOAD CALCULATION PURPOSES ONLY

Short-Circuit Calculations

The following calculations are based on the "Point-by Point" method where:

Isc = Isc x M M= 1/(1+f) f = 1.732 x L x I / C x E XFMR: IP(sca)= IP(sca)x Vp x%Z / 100,000xKVA IS(sca... Vp x M x IS(sca) / Vs

SOURCE FAULT VALUE DERIVED FROM PREVIOUSLY ENGINEERED PLANS

Fault Point	Fault Point Description	Source (Fault Point)	Source I (amps)	Conduit Type	Wire/Bus Size	Wire/Bus Type	'C' value	E (volts)	L (length)	X'FMR KVA	X'FMR Z	f	M	Isc
1	EXISTING MSB-NORTH		25044											22000
2	UCCSHA	1	22000	M	1 Set(s) of 500 KCML	AL	18755	480	210			0.889	0.53	11647
3	T-UCCS-LA/LC PRI	2	11647	M	1 Set(s) of 300 KCML	AL	13909	480	12			0.036	0.97	11240
4	T-UCCS-LA/LC SEC	3	11240	M	Set(s) of		#N/A	208		150	3	1.867	0.35	9048
5	T-UCCS-SA PRI	2	11647	M	1 Set(s) of 6	CU	2425	480	8			0.139	0.88	10229
6	T-UCCS-SA SEC	5	10229	M	Set(s) of		#N/A	208		30	4.1	11.609	0.08	1872

1) ELCTRICAL EQUIPMENT AIC RATING SHALL EXCEED CACULATED FAULT VALUE
2) ELECTRICAL EQUIPMENT FED FROM A TRANSFORMER SECONDARY RESULTING IN LESS THAN 10000 Isc SHALL BE RATED 10kAIC

Ex Switchboard: MSB-NORTH

Location: ELEC E-1-S21 **Volts:** 480Y/277 **A.I.C. Rating:** 22,000
Supply From: **Phases:** 3 **Mains Type:** MAIN FUSE
Mounting: **Wires:** 4 **Mains Rating:** 2500 A
Enclosure: **MCB Rating:** 2000 A

CKT	Circuit Description	# of Poles	Frame Size	Trip Rating	Load	Remarks
1	EXISTING LOAD PER PERVIOUSLY ENGINEERED PLANS	3	0 A	0 A	1344558 VA	
2	UCCSHA	3	400 A	300 A	147667 VA	
3						
4						
5						
6						
7						
8						
9						
10						
11						
12						
13						
14						
				Total Conn. Load:	1492225 VA	
				Total Amps:	1795 A	

Load Classification	Connected Load	Demand Factor	Estimated Demand	Panel Totals	
Lighting	14625 VA	125.00%	18282 VA		
Power	1429618 VA	100.00%	1429618 VA	Total Conn. Load:	1492225 VA
Receptacle	32440 VA	65.41%	21220 VA	Total Est. Demand:	1485702 VA
Mechanical Equipment	15542 VA	106.69%	16582 VA	Total Conn.:	1795 A
				Total Est. Demand:	1787 A

Notes:
SWITCHBOARD SCHEDULE IS NOT INDICITIVE OF EXISTING ELECTRICAL EQUIPMENT DEVICE CONFIGURATION AND IS SHOWN FOR LOAD CALCULATION PURPOSES ONLY

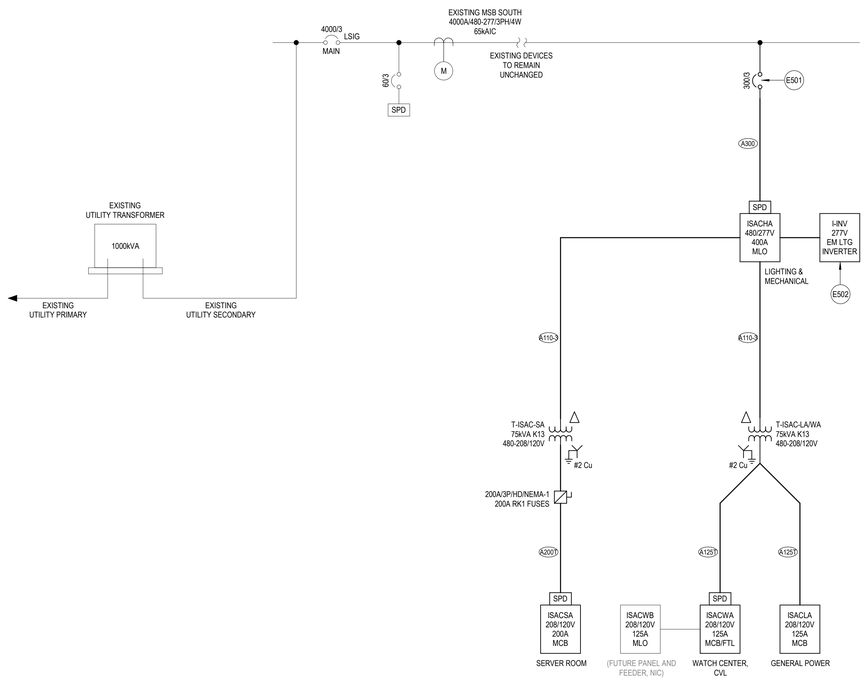

SOUTH BUILDING - ISAC

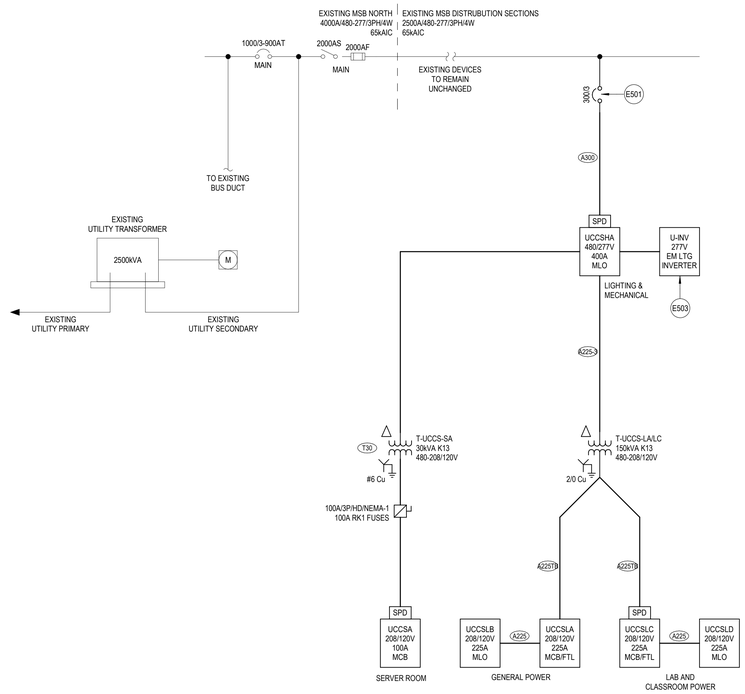

NORTH BUILDING - UCCS

1 ELECTRICAL ONE-LINE DIAGRAMS
SCALE: NTS

GENERAL SHEET NOTES

A. SEE DRAWING E0.01 FOR ABBREVIATIONS, SYMBOLS, GENERAL NOTES.

B. SOLE PRODUCT OR MANUFACTURER/SOURCE: WHERE A SINGLE PRODUCT OR MANUFACTURER/SOURCE IS NAMED, SUBJECT TO COMPLIANCE WITH REQUIREMENTS, COMPARABLE PRODUCTS WILL BE CONSIDERED.

C. VOLTAGE DROP SHALL BE LIMITED TO LESS THAN 3% FOR ALL BRANCH CIRCUITS AND 2% FOR ALL FEEDERS.

D. ALL PANELBOARDS SHALL BE EQUIPPED WITH BOLT ON BREAKERS ONLY.

E. CONTRACTOR TO VERIFY THAT LUGS ON ALL ELECTRICAL EQUIPMENT CAN ACCEPT THE WIRE SIZES INDICATED ON SCHEDULE AND PLANS.

SHEET KEYNOTES

E501 PROVIDE NEW CIRCUIT BREAKER IN EXISTING ELECTRICAL EQUIPMENT. NEW CIRCUIT BREAKER SHALL MATCH EXISTING CIRCUIT BREAKER TYPE AND MANUFACTURER. SHORT CIRCUIT WITHSTAND RATING SHALL MEET OR EXCEED EXISTING DEVICE RATING.

E502 PROVIDE 1.6KVA EMERGENCY LIGHTING INVERTER, MYERS ILLUMINATOR EM #6-EM-2-S-B-D-20-02-TW, 65KAIC, OR EQUAL. INSTALL PER EQUIPMENT MANUFACTURER SPECIFICATIONS. INCLUDE STARTUP, TRAINING AND EXTENDED WARRANTY.

E503 PROVIDE 3.75KVA EMERGENCY LIGHTING INVERTER, MYERS ILLUMINATOR SUPERNOVA #6-I-03-S-B-A-20-03-T, 65KAIC, OR EQUAL. INSTALL PER EQUIPMENT MANUFACTURER SPECIFICATIONS. INCLUDE STARTUP, TRAINING AND EXTENDED WARRANTY.

FEEDER SCHEDULE

(X) A### INDICATES ALUMINUM CONDUCTORS

A110-3	3#2/0 + 1#4 G, 1 1/2" C
A125T	4#2/0 + 1#1/0 G, 2" C
A200T	4#250KCMIL + 1#2 G, 2 1/2" C
A225	4#300KCMIL + 1#2 G, 2 1/2" C
A225-3	3#300KCMIL + 1#2 G, 2 1/2" C
A225TB	4#300KCMIL + 1#3/0 G, 2 1/2" C
A300	4#500KCMIL + 1#2 G, 3" C
T30	30KVA TRANSFORMER, 480-208Y/120V, 3PH PRIMARY FEEDER: 3#6 + 1#10 G, 3/4" C SECONDARY FEEDER: 4#1 + 1#6 G, 1 1/2" C BONDING JUMPERS & GROUNDING ELECTRODE CONDUCTOR: #6

UCCS

UCCS CYBERSECURITY AND SPACE ECOSYSTEM EXPANSION

3650 North Nevada Ave
Colorado Springs, CO, 80907

SMITHGROUP

899 LOGAN STREET
SUITE 508
DENVER, CO 80203
303.832.3272
smithgroup.com

RIDER LEVETT BUCKNALL
COST ESTIMATOR
1675 LARIMER STREET
DENVER, CO, 80202
720-904-1480

NV5
ACOUSTICS, IT/TELECOM & SECURITY, AUDIOVISUAL
2650 18TH STREET, SUITES 201-203
DENVER, CO 80211
720-213-7550

MARTIN/MARTIN, INC.
STRUCTURAL ENGINEER
12499 WEST COLFAX AVENUE
LAKEWOOD, CO, 80215
303-431-6100

ISSUED FOR	REV	DATE
BID SET		04MAY2021
CONSTRUCTION DOCUMENTS		15APR2021
DESIGN DEVELOPMENT		23DEC2020

SEALS AND SIGNATURES

Exp 10-31-21

SHEET TITLE
ELECTRICAL DIAGRAMS & CALCULATIONS

PROJECT NUMBER 12654.000

SHEET NUMBER CD **E5.1**

Author

Plot Date: 5/4/2021 8:44:20 AM

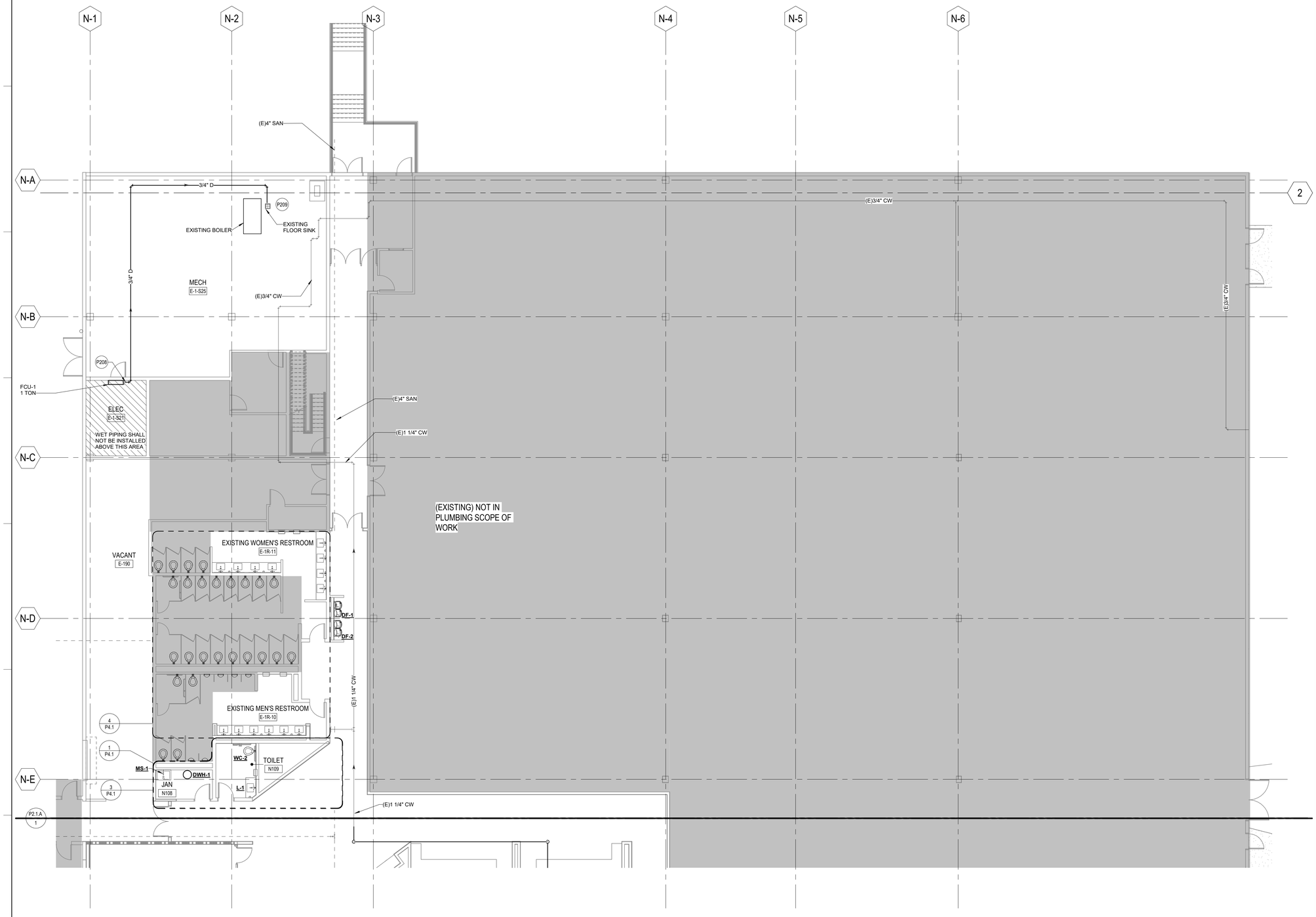

1 FIRST LEVEL PLUMBING PLAN - NORTH - AREA B
SCALE: 1/8" = 1'-0"

GENERAL SHEET NOTES

A. ALL PIPING EXPOSED TO SUNLIGHT MUST BE METALLIC.
B. SLOPE SANITARY WASTE PIPE 3" OR LARGER AT 1/8" PER FOOT (1 PERCENT) UNLESS OTHERWISE NOTED.
C. SLOPE SANITARY WASTE PIPE 2-1/2" AND SMALLER AT 1/4" PER FOOT (2 PERCENT) UNLESS OTHERWISE NOTED.
D. SLOPE CONDENSATE DRAIN AT 1/8" PER FOOT (1 PERCENT) UNLESS OTHERWISE NOTED.
E. ALL HORIZONTAL DRAINS SHALL BE PROVIDED WITH CLEANOUTS LOCATED NO MORE THAN 100 FEET APART.
F. CLEANOUTS SHALL BE INSTALLED AT THE BASE OF ALL STACKS AND EACH CHANGE OF DIRECTION GREATER THAN 45 DEGREES IN THE BUILDING SEWER, BUILDING DRAIN, AND HORIZONTAL WASTE OR SOIL LINES. WHERE MORE THAN ONE CHANGE IN DIRECTION OCCURS IN A RUN OF PIPING ONLY ONE CLEANOUT SHALL BE REQUIRED FOR EACH 50 FEET OF DEVELOPED LENGTH OF THE DRAINAGE PIPING FOR PIPING 4 INCHES AND SMALLER AND 100 FEET MINIMUM INTERVALS FOR PIPING LARGER THAN 4 INCHES.
G. ALL FLOOR DRAINS AND FLOOR SINKS SHALL BE PROVIDED WITH TRAP GUARD.
H. PROVIDE SHUT-OFF VALVE AT EACH EQUIPMENT AND FIXTURE CONNECTION.
I. REFER TO SERVICE CONNECTION SCHEDULE FOR PIPE SIZE TO FIXTURES.
J. SEE STRUCTURAL DRAWINGS FOR SLAB-ON-GRADE INFILL.

SHEET KEYNOTES

P208 PROVIDE 3/4" TRAPPED AND VENTED CONDENSATE DRAIN. SEE DETAIL 32/P7.1.
P209 TERMINATE 3/4" CONDENSATE DRAIN AT EXISTING FLOOR SINK OR DRAIN WITH A MINIMUM 2" AIR GAP.

UCCS

UCCS CYBERSECURITY AND SPACE ECOSYSTEM EXPANSION

3650 North Nevada Ave
Colorado Springs, CO, 80907

SMITHGROUP

899 LOGAN STREET
SUITE 508
DENVER, CO 80203
303.832.3272
smithgroup.com

RIDER LEVETT BUCKNALL
COST ESTIMATOR
1675 LARIMER STREET
DENVER, CO, 80202
720-904-1480

NV5
ACOUSTICS, IT/TELECOM & SECURITY, AUDIOVISUAL
2650 18TH STREET, SUITES 201-203
DENVER, CO 80211
720-213-7550

MARTIN/MARTIN, INC.
STRUCTURAL ENGINEER
12499 WEST COLFAX AVENUE
LAKEWOOD, CO, 80215
303-431-6100

ISSUED FOR	REV	DATE
BID SET		04MAY2021
CONSTRUCTION DOCUMENTS		15APR2021
DESIGN DEVELOPMENT		23DEC2020
SCHEMATIC DESIGN		19OCT2020

SEALS AND SIGNATURES

KEYPLAN

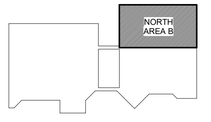

SHEET TITLE

FIRST LEVEL PLUMBING PLAN - NORTH - AREA B

PROJECT NUMBER 12654.000

CD

SHEET NUMBER **P2.1.B**

Author

5/3/2021 10:13:39 AM

Plot Date:

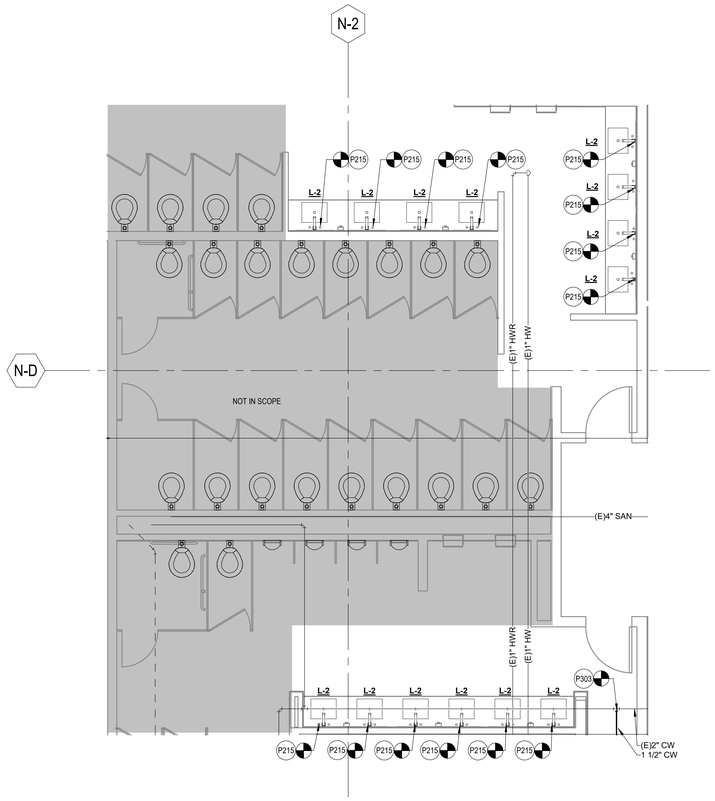

4 DEDUCT ALTERNATE - FIRST LEVEL ENLARGED PLUMBING PLAN - NORTH - AREA B
SCALE: 1/4" = 1'-0"

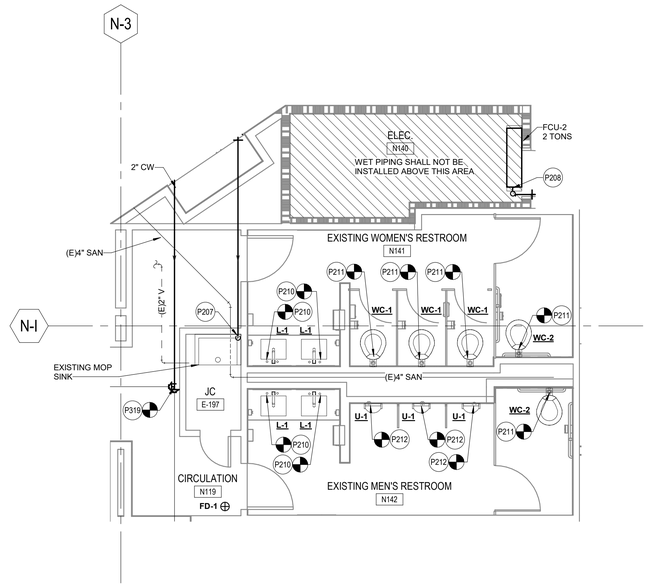

2 FIRST LEVEL ENLARGED PLUMBING PLAN - NORTH - AREA A
SCALE: 1/4" = 1'-0"

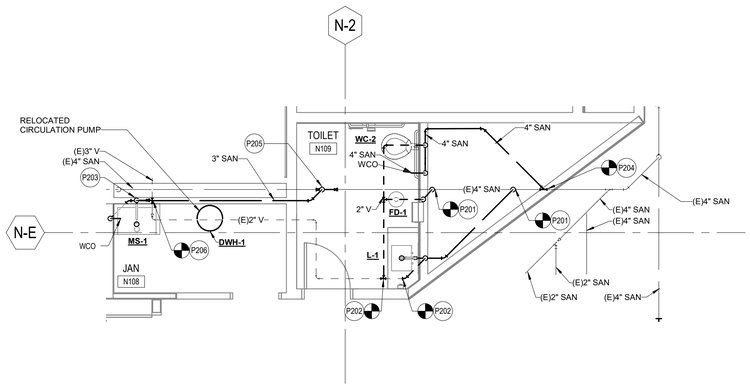

3 FIRST LEVEL ENLARGED PLUMBING SAN/VENT PLAN - NORTH - AREA B
SCALE: 1/4" = 1'-0"

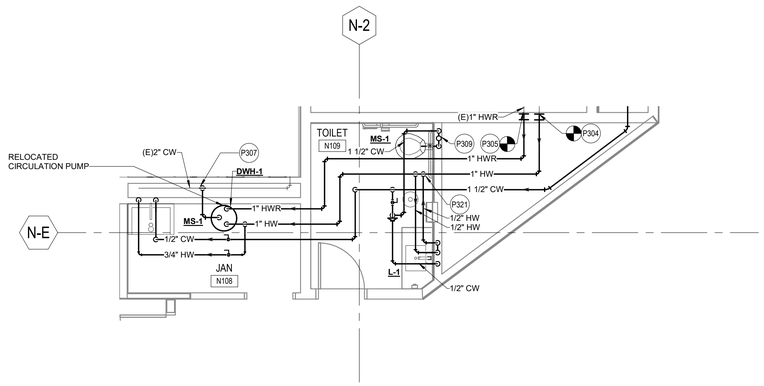

1 FIRST LEVEL ENLARGED PLUMBING WATER PLAN - NORTH - AREA B
SCALE: 1/4" = 1'-0"

GENERAL SHEET NOTES

A. ALL PIPING EXPOSED TO SUNLIGHT MUST BE METALLIC.
B. SLOPE SANITARY WASTE PIPE 3" OR LARGER AT 1/8" PER FOOT (1 PERCENT) UNLESS OTHERWISE NOTED.
C. SLOPE SANITARY WASTE PIPE 2-1/2" AND SMALLER AT 1/4" PER FOOT (2 PERCENT) UNLESS OTHERWISE NOTED.
D. SLOPE CONDENSATE DRAIN AT 1/8" PER FOOT (1 PERCENT) UNLESS OTHERWISE NOTED.
E. ALL HORIZONTAL DRAINS SHALL BE PROVIDED WITH CLEANOUTS LOCATED NO MORE THAN 100 FEET APART.
F. CLEANOUTS SHALL BE INSTALLED AT THE BASE OF ALL STACKS AND EACH CHANGE OF DIRECTION GREATER THAN 45 DEGREES IN THE BUILDING SEWER, BUILDING DRAIN, AND HORIZONTAL WASTE OR SOIL LINES. WHERE MORE THAN ONE CHANGE IN DIRECTION OCCURS IN A RUN OF PIPING ONLY ONE CLEANOUT SHALL BE REQUIRED FOR EACH 50 FEET OF DEVELOPED LENGTH OF THE DRAINAGE PIPING FOR PIPING 4 INCHES AND SMALLER AND 100 FEET MINIMUM INTERVALS FOR PIPING LARGER THAN 4 INCHES.
G. ALL FLOOR DRAINS AND FLOOR SINKS SHALL BE PROVIDED WITH TRAP GUARD.
H. PROVIDE SHUT-OFF VALVE AT EACH EQUIPMENT AND FIXTURE CONNECTION.
I. REFER TO SERVICE CONNECTION SCHEDULE FOR PIPE SIZE TO FIXTURES.
J. SEE STRUCTURAL DRAWINGS FOR SLAB-ON-GRADE INFILL.

SHEET KEYNOTES

P201	CONNECT NEW 2" SANITARY FROM POINT OF CONNECTION TO EXISTING 4" SANITARY PIPE BELOW GRADE.
P202	CONNECT NEW 2" VENT FROM POINT OF CONNECTION TO EXISTING 2" VENT.
P203	2" VENT UP FROM MOP SINK.
P204	CONNECT NEW 4" SANITARY FROM POINT OF CONNECTION TO 4" SANITARY PIPE BELOW GRADE.
P205	CONNECT NEW 3" SANITARY FROM POINT OF CONNECTION TO 4" SANITARY PIPE BELOW GRADE.
P206	CONNECT NEW 2" VENT FROM POINT OF CONNECTION TO 3" VENT.
P207	TERMINATE 3/4" CONDENSATE DRAIN AT EXISTING MOP SINK WITH A MINIMUM 2" AIR GAP.
P208	PROVIDE 3/4" TRAPPED AND VENTED CONDENSATE DRAIN. SEE DETAIL 32/P7.1.
P210	NEW LAVATORY FIXTURE AND FAUCET CONNECTION TO EXISTING ROUGH-INS.
P211	NEW WATER CLOSET AND FLUSH VALVE CONNECTION TO EXISTING ROUGH-INS.
P212	NEW URINAL AND FLUSH VALVE CONNECTION TO EXISTING ROUGH-INS.
P215	ALTERNATE - REPLACING EXISTING LAVATORY SINK AND FAUCET WITH NEW L-2 SINK AND FAUCET.
P303	CONNECT NEW 1 1/2" DOMESTIC COLD WATER FROM POINT OF CONNECTION TO EXISTING 2" PIPE ABOVE CEILING.
P304	CONNECT NEW 1" DOMESTIC HOT WATER FROM POINT OF CONNECTION TO EXISTING 1" PIPE ABOVE CEILING.
P305	CONNECT NEW 1" DOMESTIC HOT WATER RETURN FROM POINT OF CONNECTION TO EXISTING 1" PIPE ABOVE CEILING.
P307	CONNECT NEW 1" DOMESTIC COLD WATER FROM POINT OF CONNECTION TO EXISTING 2" DOMESTIC COLD WATER.
P309	PROVIDE WATER HAMMER ARRESTOR SIOUX CHIEF 'SIZE A' WITH ACCESS PANEL.
P319	CONNECT NEW 2" DOMESTIC COLD WATER FROM POINT OF CONNECTION TO EXISTING 3/4" DOMESTIC COLD WATER.
P321	PROVIDE FLOW-SPLITTER UNIT, KEMPER MODEL 651-06 WITH SHUT-OFF VALVES.

UCCS

UCCS CYBERSECURITY AND SPACE ECOSYSTEM EXPANSION

3650 North Nevada Ave
Colorado Springs, CO, 80907

SMITHGROUP

899 LOGAN STREET
SUITE 508
DENVER, CO 80203
303.832.3272
smithgroup.com

RIDER LEVETT BUCKNALL
COST ESTIMATOR
1675 LARIMER STREET
DENVER, CO, 80202
720-904-1480

NV5
ACOUSTICS, IT/TELECOM & SECURITY, AUDIOVISUAL
2650 18TH STREET, SUITES 201-203
DENVER, CO 80211
720-213-7550

MARTIN/MARTIN, INC.
STRUCTURAL ENGINEER
12499 WEST COLFAX AVENUE
LAKEWOOD, CO, 80215
303-431-6100

ISSUED FOR	REV	DATE
BID SET		04MAY2021
CONSTRUCTION DOCUMENTS		15APR2021
DESIGN DEVELOPMENT		23DEC2020
SCHEMATIC DESIGN		19OCT2020

SEALS AND SIGNATURES

SHEET TITLE
PLUMBING ENLARGED PLANS

12654.000
PROJECT NUMBER

CD **P4.1**
SHEET NUMBER

Author
5/3/2021 10:13:45 AM
Plot Date: